CyFlex® Engine Controls

Version 8

February 5, 2024

Developed by Transportation Laboratories

Version History

Version	Date	Revision Description
1	7/24/2017	Initial publication
2	8/23/2018	Formatting revisions
3	1/29/2019	Revise to reflect changes to the control programs
4	3/30/2020	Retrofit to new template
5	8/17/2021	Added *Section 1.2 Summary of Engine Controls Tasks* on page 1 with content of *Table 1* that lists relevant cyflex.com usage help hyperlinked cross-references Removed Appendix A which contained usage help for `eng_ctrl_task` and changed references from Appendix A to *Table 1* Renamed Appendix B to Appendix A and revised intra-document cross-references accordingly. Renamed Appendix C to Appendix B and revised intra-document cross-references accordingly. Removed Appendix D which contained usages for `set_eng_mode`, `sp`, `th`, `dy`, `other`, `dy_gains`, `dy_ramp`, and `reset_dyni_int`. Included cyflex.com hyperlinked usage help cross-references to these commands in *Table 1*
6	1/18/2022	Updated *Figure 1* on page 4 for varying Kp values Corrected the entry for the `MD` variable in *Table 4* on page 17 Made miscellaneous corrections to Appendix *B. Example Command Map* on page 38
7	5/18/2022	Updated all hypertext linked cross-references to cyflex.com usage help descriptions
8	2/5/2024	Rebrand to TRP Laboratories

Document Conventions

This document uses the following typographic and syntax conventions.

- Commands, command options, file names or any user-entered input appear in Courier type. Variables appear in Courier italic type.

  Example: Select the `cmdapp-`*`relVersion-buildVersion`*`.zip` file….

- User interface elements, such as field names, button names, menus, menu commands, and items in clickable dropdown lists, appear in Arial bold type.

  Example: **Type**: Click **Select Type** to display drop-down menu options.

- Cross-references are designated in Arial italics.

  Example: Refer to *Figure 1*…

- Click intra-document cross-references and page references to display the stated destination.

  Example: Refer to *Section 1 Overview* on page 1.

  The clickable cross-references in the preceding example are *1*, *Overview*, and on page 1.

CyFlex Documentation

CyFlex documentation is available at https://cyflex.com/. View **Help & Docs** topics or use the **Search** facility to find topics of interest.

Table of Contents

List of Figures

List of Tables

1 Overview

Proportional-Integral-Derivative (PID) control is the most common control algorithm used in industry and has been universally accepted in industrial control. The popularity of PID controllers can be attributed partly to their robust performance in a wide range of operating conditions and partly to their functional simplicity which allows engineers and technicians to operate them in a simple, straightforward manner.

The basic idea behind a PID controller is to read a sensor, then compute the desired actuator output by calculating proportional, integral, and derivative responses and then summing those three components to compute the output.

1.1 Control Systems

In a typical control system, the process variable is the system parameter that needs to be controlled, such as speed (RPM) or torque (lb_ft). A sensor is used to measure the process variable and provide feedback to the control system. The set point is the desired target value for the process variable, such as 1800 RPM in the case of a speed control system.

At any given moment, the difference between the process variable and the target is used by the control system algorithm to determine the desired actuator output to drive the system. For instance, if the measured speed variable is 1700 RPM and the desired target speed is 1800 RPM, then the actuator output specified by the control algorithm might be decrease excitation on a dynamometer. Reducing excitation on the dynamometer causes the system to decrease load and results in an increase to the system speed. This is called a closed loop control system because the process of reading sensors to provide constant feedback and calculating the desired actuator output is repeated continuously and at a fixed loop rate.

1.2 Summary of Engine Controls Tasks

Table 1 lists the engine controls programs.

Table 1: CyFlex Engine Control Programs

Task	Purpose	Cyflex.com Usage Help Reference
`eng_ctrl_task`	Provide PID control algorithms for engine throttle and dyno(s). Normally spawned by the by the `eng_ctrl_specs` task.	Refer to `eng_ctrl_task` and `eng_ctrl_specs`
`set_eng_mode`	Set engine control mode	Refer to `set_eng_mode`
`sp`	Set speed target	Refer to `sp`
`to`	Set torque target	Refer to `to`
`th`	Set throttle in open loop	Refer to `th`
`dy`	Set dyno controller in open loop	Refer to `dy`
`other`	Set target for ‘other’ control loop	Refer to `other`

Task	Purpose	Cyflex.com Usage Help Reference
`dy_gains`	Set dyno gains	Refer to `dy_gains`
`dy_ramp`	Set dyno ram	Refer to `dy_ramp`
`reset_dyno_int`	Set dyno controller integral term to 0.0	Refer to `reset_dyno_int`

2 PID Controllers

The PID control scheme is named after its three correcting terms, whose sum constitutes the manipulated variable (MV). The proportional, integral, and derivative terms are summed to calculate the output of the PID controller.

Defining ***u(t)*** as controller output, the final form of the PID algorithm is:

$$\mathrm{u}(t) = \mathrm{MV}(t) = K_p e(t) + K_i \int_0^t e(\tau)\,d\tau + K_d \frac{d}{dt} e(t)$$

where:

K_p: Proportional gain, a tuning parameter

K_i: Integral gain, a tuning parameter

K_d: Derivative gain, a tuning parameter

e: Error = Set Point – Feedback Variable

t: Time or instantaneous time (the present)

τ: Variable of integration; takes on values from time 0 to the present t.

2.1 Proportional Term

The proportional term produces an output value that is proportional to the present error value. The proportional response can be adjusted by multiplying the error by a constant K_p, called the proportional gain constant.

The proportional term is given by:

$$P_{\text{out}} = K_p\, e(t)$$

A high proportional gain results in a large change in the output for a given change in the error. If the proportional gain is too high, the system can become unstable. In contrast, a small gain results in a small output response to a large input error, and a less responsive or less sensitive controller. If the proportional gain is too low, the control action may be too small when responding to system disturbances. Tuning theory and industrial practice indicate that the proportional term should contribute the bulk of the output change in the early stages of a disturbance or change in set point.

Figure 1: Plot of PV vs. Time for Three Values of Kp (Ki and Kd held constant)

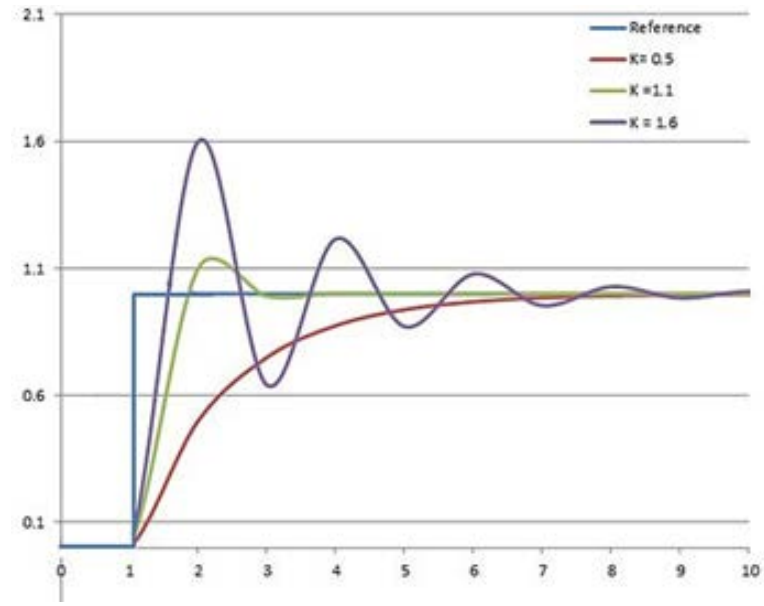

2.2 Integral Term

The contribution from the integral term is proportional to both the magnitude of the error and the duration of the error. The integral in a PID controller is the sum of the instantaneous error over time and gives the accumulated offset that should have been corrected previously. The accumulated error is then multiplied by the integral gain ***(Ki)*** and added to the controller output.

The integral term is given by:

$$I_{\text{out}} = K_i \int_0^t e(\tau)\, d\tau$$

The integral term accelerates the movement of the process towards the set point and eliminates the residual steady-state error that occurs with a pure proportional controller. However, since the integral term responds to accumulated errors from the past, it can cause the present value to over shoot the set point value.

Figure 2: Plot of PV vs. Time for Three Values of Ki (Kp and Kd held constant)

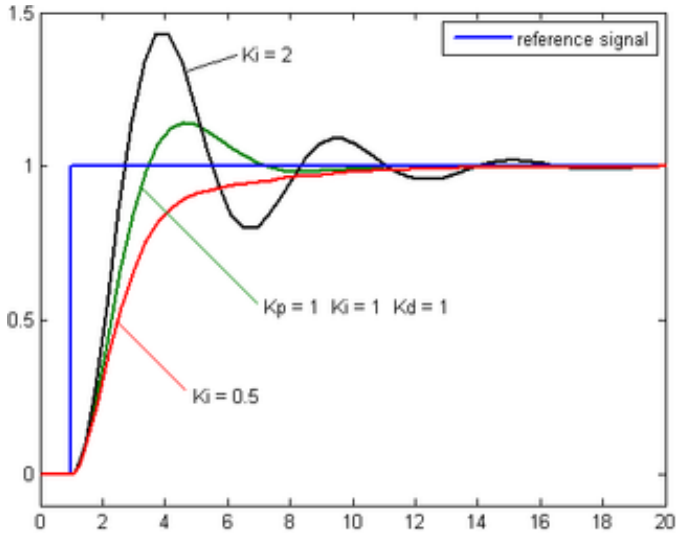

2.3 Derivative Term

The derivative term is calculated by determining the slope of the error over time and multiplying this rate of change by the derivative gain K_d. The magnitude of the contribution of the derivative term to the overall control action is manipulated by the derivative gain, K_d.

The derivative term is given by:

$$D_{\text{out}} = K_d \frac{d}{dt} e(t)$$

Derivative action predicts system behavior and thus improves settling time and stability of the system. Derivative action, however, is seldom used in practice because of its inherent sensitivity to measurement noise. If this noise is severe enough, the derivative action will be erratic and actually degrade control performance. Large, sudden changes in the measured error (which typically occur when the set point is changed) cause a sudden, large control action stemming from the derivative term. This problem can be ameliorated to a degree if the measured error is passed through a linear low-pass filter.

Figure 3: Plot of PV vs. Time for Three Values of Kd (Kp and Ki held constant)

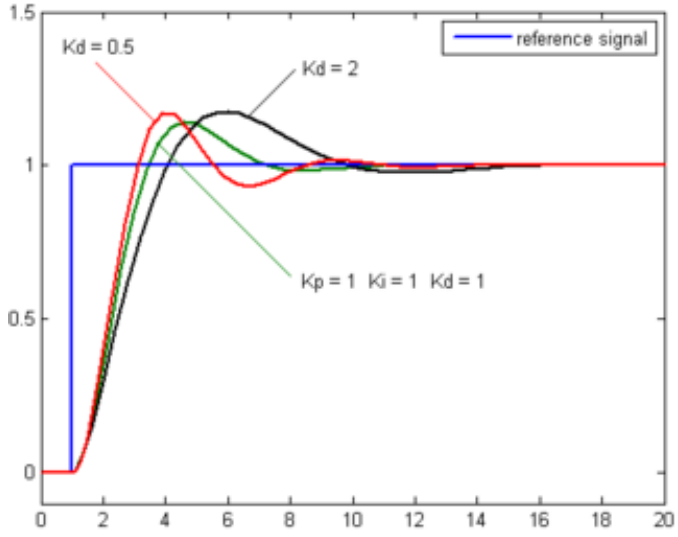

3 Gain Tuning

One tuning method that can be done with the controller on-line is to first set *Ki* and *Kd* values to zero. Increase the *Kp* until the output of the loop oscillates, then the *Kp* should be set to approximately half of that value. Next increase *Ki* until any offset is corrected in sufficient time for the process. Too much *Ki* will cause instability.

Finally, increase *Kd*, if required, until the loop is acceptably quick to reach its reference after a load disturbance. Too much *Kd* will cause excessive response and overshoot.

In order to find the sign of the gains, recall the formula for the output as a function of the error. For the proportional term, this is:

$$P_{\text{out}} = K_p\, e(t)$$

where the error is the target minus the feedback value.

If an increase in the output is required when the set point is above the feedback value, then all of the gains are positive. If a decrease in the output is required when the set point is above the feedback, then all of the gains are negative.

A fast PID loop tuning usually overshoots slightly to reach the set point more quickly; however, some systems cannot accept overshoot, in which case an over-damped closed-loop system is required, which will require a ***Kp*** setting significantly less than half that of the ***Kp*** setting that was causing oscillation.

Some systems being controlled are non-linear. That is, they have different input to output sensitivity at different operating conditions. Control tuning should generally be done at the most sensitive operating condition in order to avoid instabilities. The effects of non-linearity can be reduced or compensated for by using the error scaling multiplier, feed-forward, or command mapping features. .

Table 2: Effects of Independently Increasing a Parameter

Parameter	Rise time	Overshoot	Settling time	Steady-state error	Stability
K_p	Decrease	Increase	Small change	Decrease	Degrade
K_i	Decrease	Increase	Increase	Eliminate	Degrade
K_d	Minor change	Decrease	Decrease	No effect in theory	Improve if ***Kp*** small

Refer to the following for related information:

- *Section 4.5 Calculating the PID Controller Output Command* on page 11
- *Section 5 Feed Forward Control* on page 13
- *Section 6 Controller Output Adjustments* on page 15

4 CyFlex Implementation of Engine PID Controls

The CyFlex implementation of the general PID controller has a number of additional features compared to the system described in the preceding sections. Some of these features provide additional flexibility while others allow switching from closed loop to other forms of control.

Refer to *Figure 4* on page 9 for the information flow. The legend in the first section applies to all sections described.

4.1 Definitions

There are two distinct aspects to an engine PID control system: the control loop and the control device.

The control loop, such as engine speed, has elements of set point, feedback, error, and tolerance. The units of all of these elements are those of the feedback value. The name of the display variables for a control loop always begin with the user-specified loop name. For example, a control loop named `Speed` will create a variable called `Speed_TR` which will contain the set point/target value. The working units will be those of the variable – Speed.

An engine control device, or simply controller, will be one of two different systems: a throttle or a dynamometer. There will be a number of display variables created that are associated with a controller such as the output command, P,I & D terms, feed forward term, etc. Each of these variables will be created with the units of the controller output.

The gains for a control system come into play between the control loop and the control device. Ideally, the gains should have units of [output]/[feedback] but these units seldom exist in CyFlex. Therefore, all gain variables are assumed to have these units but for display purposes, the units are shown as [`none`].

Since there are multiple gains that may be used for an engine control system depending on the control mode, the ones that are actually in play are displayed as the `loop_name_XG` where `X` can be `P`, `I`, `D`, and `F` (feedforward). For example, `Speed_PG`.

4.2 Selecting the Desired Value for the Control Loop

Figure 4: PID Controller Information Flow

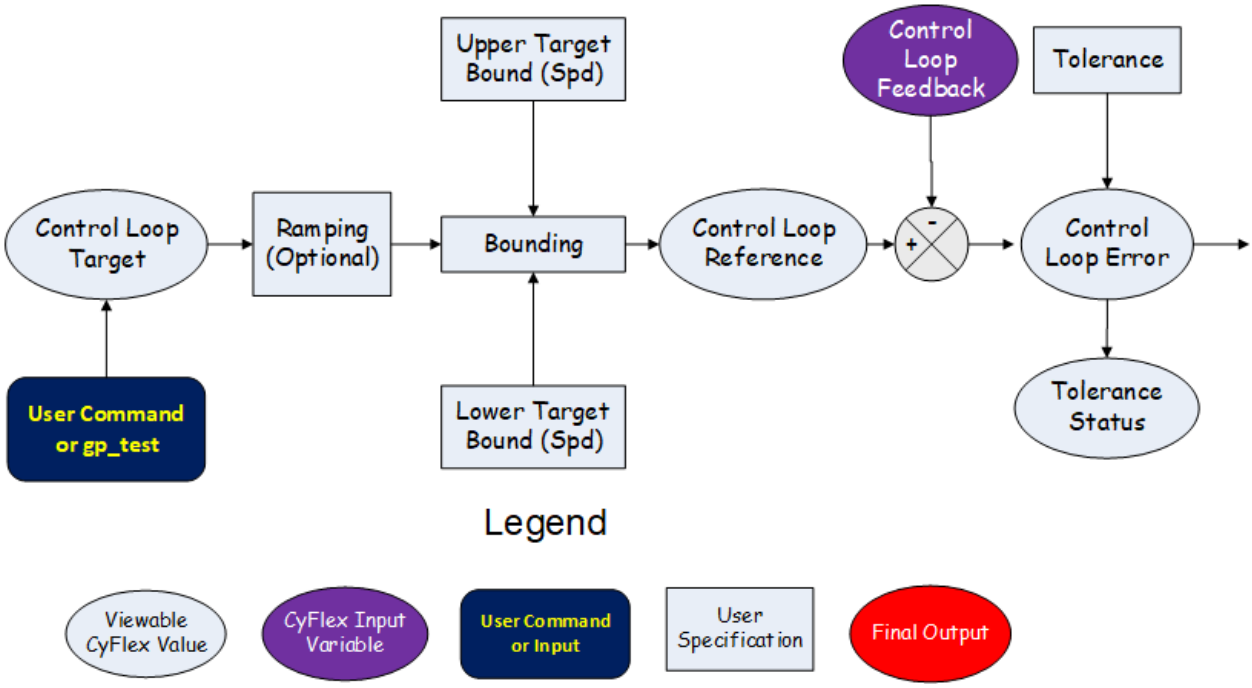

Beginning at the left most side of this diagram, set a target for the control loop. This can be done with the `<sp>`, `<to>`, or `<other>` commands or from within a general-purpose test procedure. Refer to *Table 1* on page 1 for cyflex.com usage help for these commands.

The closed loop target is *not* automatically set if either of two CyFlex features have been requested. First, for speed control, the user has the option of selecting maximum and minimum speed settings that keep the engine and dynamometer safe. These bounds are set in the engine parameter specification file along with many other engine and test cell values. The bounds may also represent the physical limits of the controlled process.

The second option that can be exercised on the target value is that the target can be ramped from the present value, or from an arbitrary value in a test procedure, to the final value. The initial ramp rate can be set in a specification file, with the commands, or in a test procedure.

Use any of the above commands to automatically put the appropriate controller into closed loop mode if it was previously in open loop.

The ramped value can be displayed as the control loop reference. Ramping provides a linear transition of the control loop target from one value to the next at a specified rate.

4.3 Finding the Control Loop Error

As mentioned in *Section 1* Overview on page 1, the control loop error is the difference between the control loop set point and the actual feedback. It is important to note the sign of this difference because it will affect the sign of the gains that are used.

Error = Set Point – Actual

Or

Error = Control Loop Reference – Feedback Value

4.4 Displaying Control Loop Values

Specify a name for each control loop. Often times the name of the feedback variable is used, but this need not be the case. However, the name must coincide to a valid CyFlex variable that already exists when the engine control task is started because the program uses the units of this variable in its calculations.

From the Visio legend above, note that the control loop target, reference, and error values are all stored in viewable CyFlex variables. The variable names are the control loop name with a three-character suffix attached. *Table 3* shows all of the control loop variables that are created.

Table 3: Control Loop Variables

Control Loop Real Variables	**Explanation**
`LoopName_TR`	Control loop target (set point when ramping is completed)
`LoopName_RF`	Control loop reference (set point while ramping, with bounding)
`LoopName_ER`	Control loop error
`LoopName_TO`	Control loop tolerance
`LoopName_TP`	Control loop reference plus the tolerance
`LoopName_TM`	Control loop reference minus the tolerance
`LoopName_PG`	Present control loop proportional gain which is a function of control mode.
`LoopName_IG`	Present control loop integral gain which is a function of control mode.
`LoopName_DG`	Present control loop derivative gain which is a function of control mode.
`LoopName_FV`	Control loop feedback value which may be a function of control mode.
`LoopName_TL`	Flag to indicate if the control loop is in-tolerance.
CyFlex Event	**Explanation**
`LoopName_IN`	CyFlex event that is set when a loop becomes in-tolerance
`LoopName_OT`	CyFlex event that is set when a loop goes out of tolerance

4.5 Calculating the PID Controller Output Command

Figure 5: PID Controller Output Calculation Flow

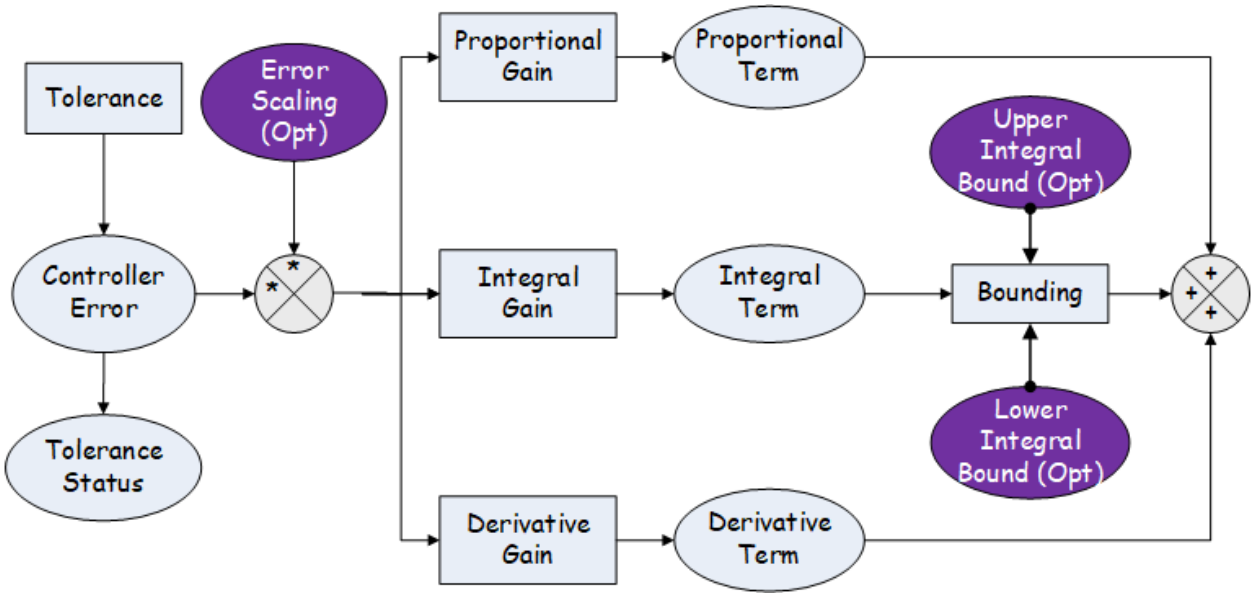

The PID controller output is calculated as mentioned in *Section 1* Overview on page 1 with two important additions described below and in *Section 4.5.1 Integral Bounding* below .

First, specify a CyFlex variable that represents an error scaling multiplier. If specified, create a computed expression for the multiplier and update it at a rate that is suitable to the control scheme. Scaling the error has the same effect as changing all of the PI&D gains as a function of something else in the system.

For example, you may need small gains when the speed value is low to account for additional transport delays while having normal gains when the speed is high. To accomplish this, a computed expression for the gain scale may be similar to the following:

```
GainScale = MinimumValue + PresentSpeed / RatedSpeed
```

When the `PresentSpeed` is equal to `RatedSpeed`, the `GainScale` would equal 1.0 + the minimum value. As `PresentSpeed` reduces, the `GainScale` would reduce in a linear fashion.

A gain scaling table may also be defined in the same file as a command map, as shown in *Appendix B. Example Command Map* on page 38. However, both methods should not be used for the same controller.

4.5.1 Integral Bounding

The second addition to the *Overview* is that the integral term can and will have separate bounding. If so desired, the integral bounds may be determined by a CyFlex variable or computed expression. In this way, the bounds can vary in any manner desired.

There are several benefits to including integral term bounding.

1. First, if the system is very slow to respond in some areas of operation, the integrated error might reach an unreasonable value. This can make recovery times longer than desired.

2. Second, if the system is unable to reach the point of zero error in steady state, the integrated error would continue to climb and approach the output bounds, which may not be desirable.

   The first two conditions are called “integrator wind-up”.

3. Third, where feed forward (discussed below) is used as the primary means of control, it may be desirable to add only limited integral authority to account for system modeling errors.

If more restrictive integral bounds are not specified, then the integral term is automatically limited to the output bound minus the feed forward term if one exists.

4.5.2 Simplified PID Controller Example

The example in *Figure 6* illustrates that the controller reference for speed has been set to 1850 rpm, the feedback value started at 1770 RPM and is now 1780 RPM. The PID gains are negative so that a decrease in command to the dynamometer raises the speed.

Figure 6: Simplified PID Controller Example

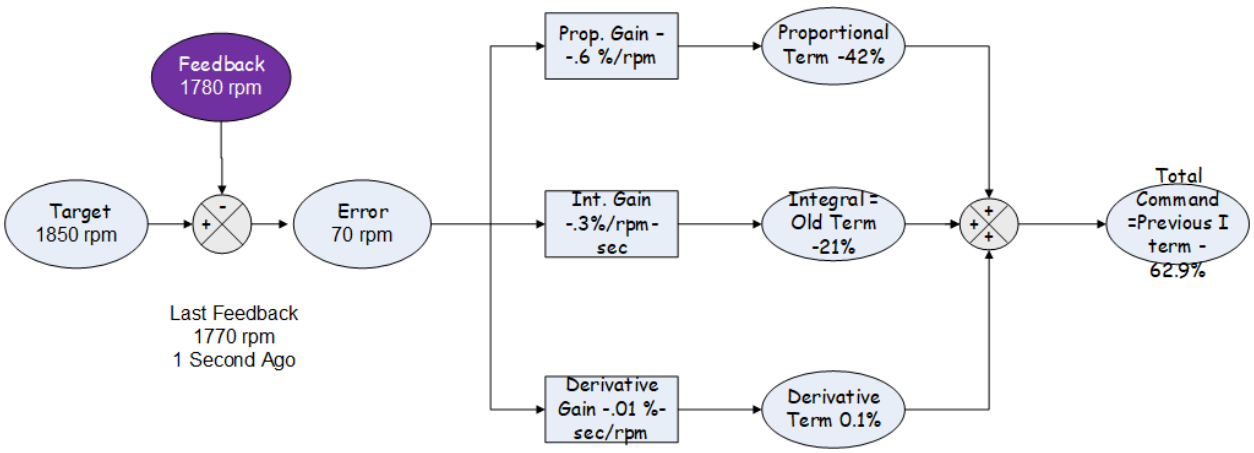

As an example:

```
Proportional Term = Error * Kp
Proportional Term = 70 rpm * (-0.6) % / rpm = -42.0 %
Integral Term = ( Error * Process Interval  * Ki ) +
Previous Integral
Integral Term = ( 70 rpm * 1 sec) * (-0.3) % / (rpm – sec)
) - 24%  = -45%

Derivative Term = ( ( Present Error – Previous Error ) /
Process Interval ) * Kd
Derivative Term = ( 70 rpm – 80 rpm ) / 1 sec * (-0.5) % -
Sec / rpm = 5.0 %
Total PID = ( -42 - 45 + 5 ) % = -82%
```

5 Feed Forward Control

There are often instances for accurately predicting the behavior of a system relative to changes in the controlled system. In those cases, it may be better to use the output of the predicted behavior as the predominant control mechanism and add small amounts of PID or PI output to bring the system to the target value.

Figure 7: Feed Forward Flow

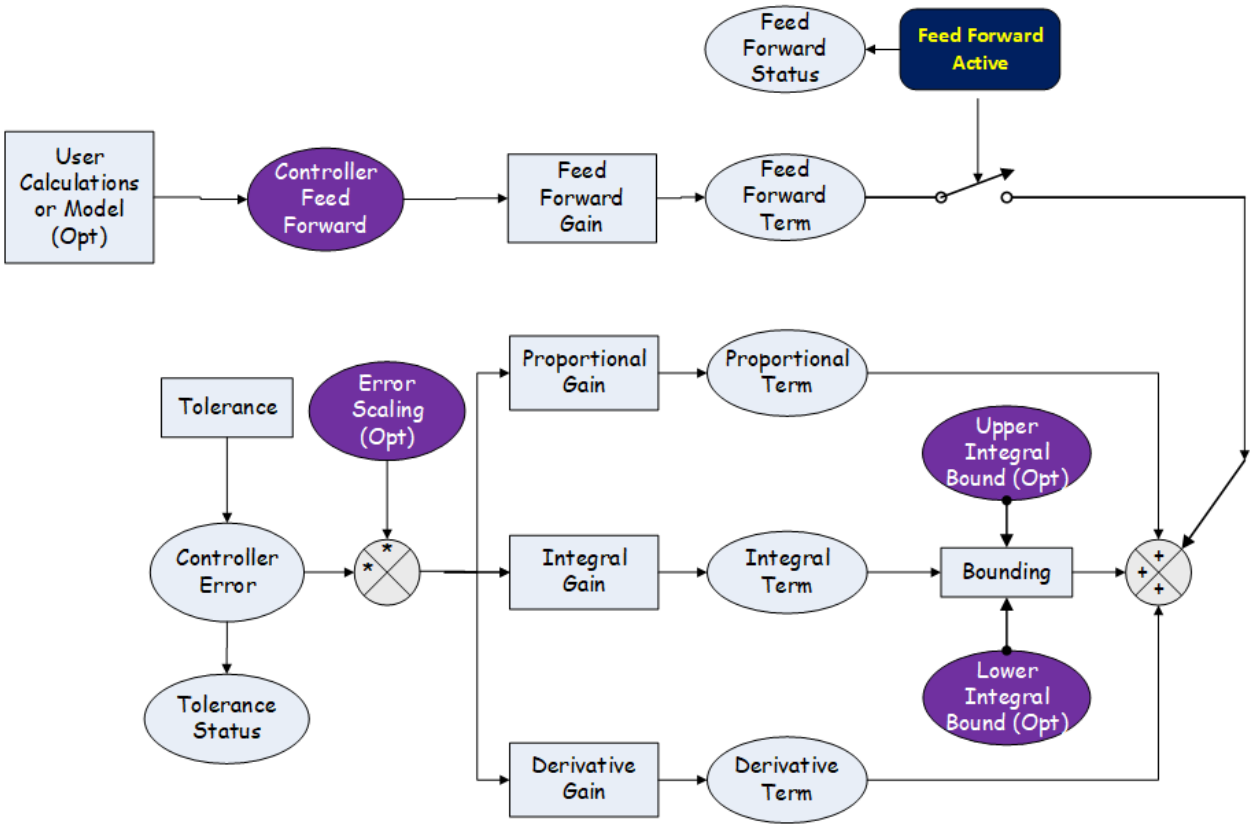

For example, it is quite easy to map an engine over the entire speed/load range to know what the effect of any given throttle position is relative to engine torque. A reverse map of speed and *desired* torque can be generated that would give a throttle position that would be a very good first approximation of actual engine torque. This throttle position could become a feed forward term in the above equation.

In the preceding example, the PID portion of the controller would only be used to generate a command that would account for errors in the model output.

In the CyFlex controller, specify a model using computed expressions, 2 or 3-D tables, or any combination of these. It is important that the result of the model is in the same units as the specified command output.

Feed forward can be turned on or off at any time but be aware of what will happen at those transitions. Because there is a goal to make transitions “bumpless” when feed forward is first turned off, the integral term is adjusted so that:

$$NewIntegralTerm = OldIntegralTerm + OldFeedForwardTerm$$

Note that the *NewIntegralTerm* is subject to the optional integral bounds when this adjustment is made.

In this way, there is no step in the output when the feed forward is turned off. Instead, the integral term is allowed to change until the system comes into balance.

Similarly, when the feed forward in turned on:

$$NewIntegralTerm = OldIntegralTerm - NewFeedForwardTerm$$

The above discussion of “bumpless” transfer applies when a controller is switched between open and closed loop.

If “bumpless” transfer is not desired, then two options are available.

1. First, feed forward can be enabled at all times and the model output set to zero when not desired. In this way, the integral term will not be adjusted. This gives the most flexibility.
2. Second, there is an option in the specification table that can set a controller for “bumpless” control or not. Using this option sets the behavior at all times.

5.1 Feed Forward Example

The amount of engine torque is closely tied to both speed and throttle position. Therefore, the engine can be mapped over the entire operating range to find the torque delivered for any combination. Depending on the time allowed for stabilization at any speed/load, the torque may be very accurate or just close.

In this case, the feed forward term will command the throttle close to the right place even before the torque can be measured. Proportional and integral terms can still be used to correct for non-linearity or inaccuracy of our feed forward prediction and when the performance of the engine changes as the engine warms up.

6 Controller Output Adjustments

Once the PID + Feed Forward calculations are made, options for hysteresis, output bounding, and command mapping are allowed before the command is turned into a real-world output as indicated in *Figure 8*.

Figure 8: Controller Output Adjustments Flow

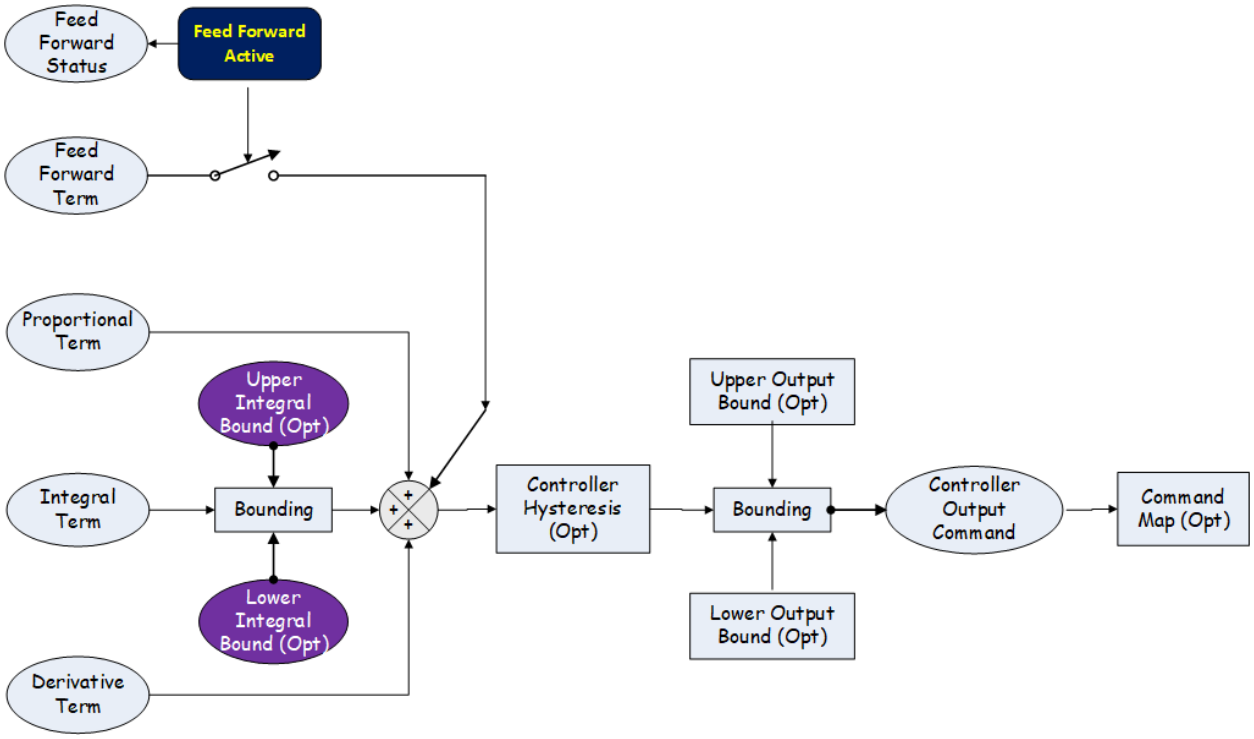

6.1 Hysteresis

The first of these options for modifying the output is the addition of hysteresis compensation to the command value. In CyFlex, the hysteresis term can be thought of as the value that would be required to overcome the dead band in a worn linkage. For example, if a linkage is worn to the equivalent of 1% of its motion, when the direction of travel is reversed, the actuator output must change by 1% before the linkage would begin to move the actuated system in the reverse direction. By setting the hysteresis value to 1% in the specification file, the system will automatically add or subtract 1% to/from the output when the direction of travel changes. If the direction of the output continues to be the same, then no additional hysteresis correction is made.

In some actuators the hysteresis changes as a function of position. In these cases, choose a value that represents either the condition of least hysteresis, or the value at the nominal operating condition, if that is fairly constant.

6.2 Output Bounding

The output of the control algorithm is normally bounded so that 0% command represents the minimum position of the actuator and 100% represents maximum output. However, there is no reason to limit the bounds to these values.

For example, if the output of the controller is directed to a current output device that is capable of 0-20 ma, but the device being driven wants a 4-20 ma signal, then it is reasonable to set the lower bound at 20%.

6.3 Output Command Map

The last way to modify the controller command is to specify a mapping function. This functionality is normally used where the system is non-linear or where linear gains do not provide sufficient speed, stability, or accuracy.

An example command map file is shown in *Appendix B. Example Command Map* on page 38 for a throttle linearization. The map file also contains error scaling values if desired.

Another means to accomplish this same functionality is to send the output of the controller to a real variable rather than to an actual output device. In this case, the real variable can be manipulated in any chosen way before sending it on to the output device.

7 Open/Closed Loop Operation

Choose whether to put the controller in open loop or closed loop. In closed loop the controller behaves as described in *Section 1.1 Control Systems* on page 1 with the options that have been included in the specification file.

Open loop has more direct control over the output. With a test procedure or user command, the output can be set directly or ramped linearly from one position to another. *Figure 9* illustrates this concept.

Figure 9: Open/Closed Loop Output Flow

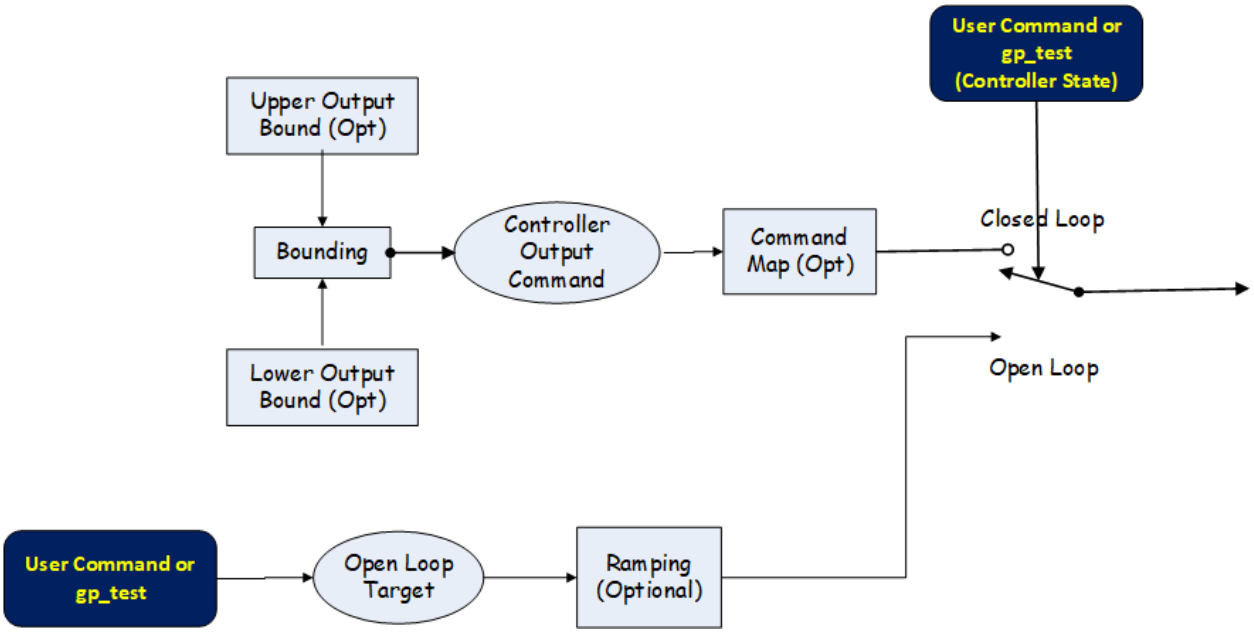

When a controller mode is changed from open loop to closed loop or vice versa, the controller `BaseName_MD` variable is set TRUE (1) for closed loop and FALSE (0) for open loop.

The `<sp>`, `<to>`, `<dy>`, `<th>` and `<other>` commands are used to set the controller targets in open and closed loop. Refer to *Table 1* on page 1 for cyflex.com usage help for these commands.

Table 4 lists all of the controller-based display variables. CyFlex supports three separate controllers: up to two dynamometers and one throttle.

Table 4: Controller-based Display Variables

Controller Real Variables	Explanation
`BaseName_PT`	Proportional correction term (scaled error multiplied by the proportional gain)
`BaseName_IT`	Integral correction term (scaled error integrated over time and multiplied by the integral gain, with bounding)
`BaseName_DT`	Derivative correction term (change in error times the derivative gain)

Controller Real Variables	Explanation
BaseName_FF	Feed forward term (feed forward value times the feed forward gain)
BaseName_CM	Final controller command (sum of PT, IT, DT, FF and bounding)
BaseName_OL	Controller open loop command. The actual open loop output may be bounded. If set, this value will also exist even when the controller is in closed loop.
BaseName_LB	Controller lower bound.
BaseName_UB	Controller upper bound.
BaseName_IL	Controller integral lower bound.
BaseName_IU	Controller integral upper bound.
BaseName_FG	Controller feed forward gain
Controller Logical Variables	**Explanation**
BaseName_FA	TRUE or 1 when feed forward has been set active
BaseName_MD	TRUE or 1 when the controller is in closed loop. FALSE or 0 when in open loop.

8 Manual Controls

There is a feature to set the open loop output of a controller with a potentiometer or other CyFlex real variable. This is called the manual or local setting. The computer tracks the voltage of this potentiometer as read in the input so that when the controller is switched into remote/auto, the output will be “bumpless” or continuous.

Specify a CyFlex real variable that will contain the manual setting and a logical variable that enables/disables local control.

Some applications use this feature because human intervention to guide the control loop through the startup process is helpful, with control being turned over to the computer when the user is satisfied with the condition of the system.

Figure 10: Manual Set of Open Loop Controller Output Flow

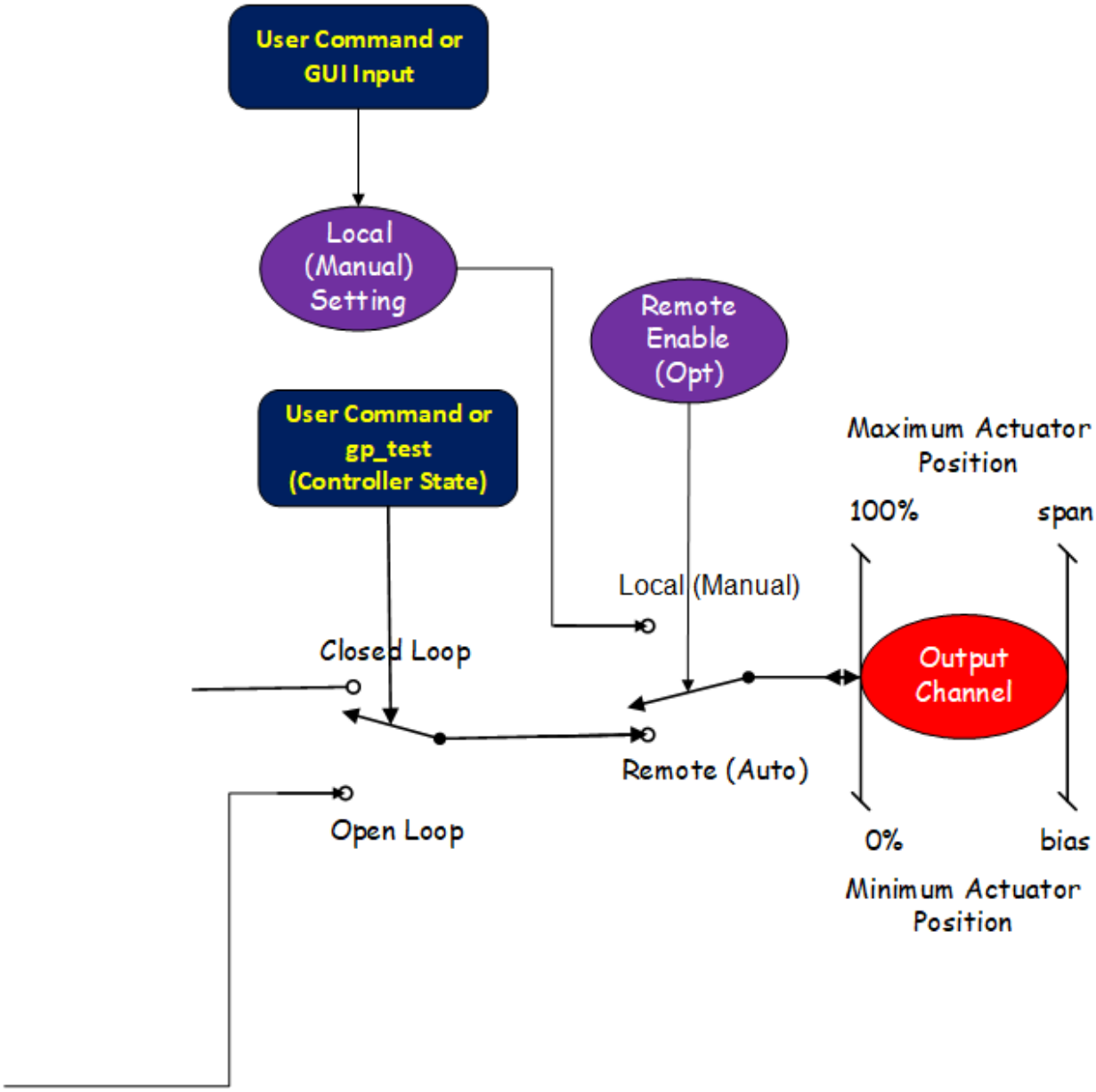

9 Auto-Tuning a Control Loop

Gain tuning of a process can be difficult to master, especially if done by someone that does so infrequently. A poorly tuned system can lead to either slow response or significant errors, both of which can be costly. Therefore, CyFlex provides a means of automatically tuning a control loop which is a modified form of the classic **Ziegler-Nichols tuning method**.

The Ziegler–Nichols tuning method**,** developed by John G. Ziegler and Nathaniel B. Nichols. It is performed by setting the *I* (integral) and *D* (derivative) gains to zero. The "P" (proportional) gain is then increased from zero until it reaches the **ultimate gain**, at which point the output of the control has stable and consistent oscillations. Then the ultimate gain and oscillation period are used to set the P, I, and D gains.

The CyFlex method assumes that the user has set the initial gains and a target value and is asking the computer to help improve the settings. The algorithm takes the following steps:

- 150 executions of the controller are used to establish the standard deviation of the present system error. The actual time to do this is dependent on the specified loop update rate.
- Open loop commands that are both above and below the present value are calculated as percentages of the existing value. Note that the best place to perform this tuning is with the output near the mid-point of its range.
- The open loop output is alternately set to the upper and lower values.
- Each open loop value is maintained until the feedback value exceeds the present error by 25%.
- The measured error and oscillation period are used in a similar manner as Ziegler/Nichols in order to arrive at new gains.
- The new gains are then displayed to the user.

A certain amount of noise in the feedback value is to be expected. Therefore, this process should be attempted several times and the gain values averaged before updating the values in the specification file.

Initiate auto-tuning with either of the following methods:

- Type `autotune` *`loop_name`* on the command line.
- Use the control display GUI and select the auto-tuning button on the command tab.

If the system does not seem to establish regular, predictable oscillations, the auto-tuning process may give up and produce an alert. Also, the auto-tuning process may be aborted by typing `abort_autotuning` *`loop_name`* or by selecting the abort auto-tuning button on the control display GUI.

Appendices

Appendix A. Control Task Specification File

```
# ------------------------------------------------------------------
#
#
#     Default Engine Control Mode
#         (REQUIRED ENTRY)
#
#     Modes are defined as:
#
#        1     Dyno control dyno torque; throttle control speed
#        2     Dyno control net torque; throttle control speed
#        3     Dyno control other channel; throttle control speed
#        4     Dyno control speed; throttle control gross torque
#        5     Dyno control speed; throttle control net torque
#        6     Dyno control speed; throttle control other channel
#

@ENG_CONTROL_MODE
   5     #     Dyno control speed; throttle control net torque

# ------------------------------------------------------------------
#
#
#     Bumpless Transfer
#     (OPTIONAL ENTRY)
#
#  The engine control task can operate in one of two ways when feed
#  forward control is made either active or inactive and when a
#  controller is switched from open to closed loop.
#
#  The first way (Y or YES) is called bumpless transfer.  In that
#  mode, the output will NOT suddenly change when feed forward is
#  turned on/off or the control mode is changed.  Instead, the
#  integral term will be adjusted by the feed forward term and the
#  output will remain constant (bumpless).
#
#  In the second way (N or NO), the output is instantly changed by the
#  feed forward term when a switch is made.  This is how the control
#  task (ctrl_task) has worked since some time in 2005 and has been
#  found to be necessary for transient emissions testing.
#
#  If this keyword is not used, then transfer will NOT be bumpless so
#  that behavior of the new eng_ctrl_task is the same as the older
#  ctrl_task
#
#  NOTE: Always use all 3 entries even if a second dyno is not being
#  used
```

```
@BUMPLESS_TRANSFER
   # First Dyno      Second Dyno       Throttle
   #                (if dual dyno)
     YES             YES               NO


# ---------------------------------------------------------------------
#
#  There are 3 different CONTROL LOOPS that may be specified.  These
#  are:
#
#     1 - Speed
#     2 - Torque
#     3 - Other
#
#
#  The engine control task can control two of the three values listed
#  depending on the control mode chosen above.  At least two of them
#  MUST BE specified.  The "other" feedback variable must be a CyFlex
#  REAL variable that already exists.
#
#  Speed and torque loop names are used for their labels ONLY and for
#  units checking.  The eng_ctrl_task will NOT use the value of speed
#  and torque entered.  Instead, it will use the proper values based
#  on the engine control mode - ctl_spd, net torque, gross torque,
#  dyno torque, etc. Refer to perf_labels for definitions.
#
#
#           Speed and Torque are existing variables that contain the
#              units desired for display variables.
#
#           "Other" variable such as average exhaust temperature,
#           boost pressure, etc. (Optional if both Speed and Torque
#                 are specified but required if not)
#
#           The eng_ctrl_specs task will truncate these labels to 28
#           characters and append the following extensions, _RF, _TR,
#           _ER, etc. for the control variable reference, target, etc.
#           terms.
#
#           All control display values are listed below.  Loopname
#           for these variables is taken from the @SPEED_LOOP_NAME,
#           @TORQUE_LOOP_NAME, and @OTHER_LOOP_NAME labels.
#
#                      loopname_RF    (Reference of feedback variable)
#                      loopname_TR    (Target of feedback variable)
#                      loopname_ER    (Error of feedback variable)
#                      loopname_TO    (Tolerance variable/value)
#                      loopname_PG    (Proportional gain)
#                      loopname_IG    (Integral gain)
```

```
#                       feedback_DG    (Derivative gain)
#                       loopname_FV    (Feedback values used for the
#                                       control display)
#                       loopname_TL    (Error is in tolerance LOGICAL
#                                       VARIABLE)
#                       loopname_IN    (Name of ERROR-IS-IN-TOLERANCE
#                                       event)
#                       loopname_OT    (Name of ERROR-IS-OUT-OF-
#                                       TOLERANCE event)
#
#  units       Units that will be associated with the _FV variable.
#              To work properly, these units should be the same as the
#              label entered and both should be the same used in the
#              perf_labels file for (ctl_spd, Dyno_torq, Net_torq, and
#              Gross_torq).
#
#  ramp_rate   The closed loop ramp rate (feedback units/sec) for the
#              control variable.  This may be a value, label, or 79
#              character expression. If a label or expression are
#              used, they must have units of the feedback variable.
#
#  loop tolerance  This is the error (+-) under which the control loop
#              is said to be in tolerance.
#
#  IMPORTANT NOTE: Many commands, as well as gp_test, will overwrite
#                  the ramp rate so it is likely that the value in the
#                  specification file will only be used initially.

@SPEED_LOOP_NAME
   #label(28)  units    CL-ramp_rate  loop tolerance
   Speed       rpm      25             5

@TORQUE_LOOP_NAME
   #label(28)  units    CL-ramp_rate  loop tolerance
   Torque      lb_ft    25             10

@OTHER_LOOP_NAME
   #label(28)  units    CL-ramp_rate  loop tolerance
   AveExhTemp  deg_f    5              20


# ---------------------------------------------------------------------
#
#  There are 3 different CONTROLLERS that may be specified.  These
#  are:
#
#     1 - DYNO
#     2 - DYNO 2 (optional - for dual dyno control)
#     3 - THROTTLE
#
```

```
# ------------------------------------------------------------------


# ------------------------------------------------------------------
#
#     Dyno Dual Loop Control - for water brake dynos with inlet and
#     outlet restrictions that need to be switched as a function of an
#     independent variable.  This option may also be used when two
#     separate dynos are used in series - such as when a small
#     motoring dyno is in series with a water brake or eddy current
#     dyno.
#
#     If this keyword is used, the first dyno (DYNO) will be used
#     below the threshold and DYNO2 will be used above the threshold.
#
#     If this keyword is NOT used, then DYNO will be used all of the
#     time.
#
#         (OPTIONAL ENTRY)
#
#
#  Active                this specifies whether the dyno switch and
#                        second dyno controller are active:
#                           0, N, or NO  = inactive
#                           1, Y, or YES = active
#
#  Threshold_value       is the value of the switch variable below
#                        which the dyno will switch to the second dyno
#                        controller. It should be of the form
#                        123.4[units].
#
#  Threshold_hysteresis is the amount of hysteresis that is applied to
#                        eliminate switching between controllers due to
#                        operating near the threshold crossing.  It
#                        should be of the form 12.3[units].
#
#  Switch_variable       is the label of a REAL variable that will be
#                        used to determine when to switch between
#                        controllers. This variable must already exist.
#
#
#  Example:              Threshold = 100[lb_ft]
#                        Hysteresis = 10[lb_ft]
#                        Switch Variable = Dyno_Torq
#
#                        If torque is 50 lb-ft, the first dyno
#                        controller is used, and continues to be used
#                        until torque exceeds 110 lb-ft (100 threshold
#                        + 10 hysteresis).  At this point the second
#                        dyno controller is used, and is continued to
```

```
#                        be used until torque drops below 90 lb-ft
#                        (100 threshold - 10 hysteresis).
#
#                        When the first dyno is in use, the output of
#                        the second dyno will be set to the lower
#                        bound. Similarly, when the second dyno is
#                        control, the output of the first dyno will be
#                        set to its upper bound.
#
#                        Therefore, care must be taken select bounds
#                        that accurately reflect the requirements at
#                        the switch point.  Also, hysteresis should be
#                        kept to a reliable setting.
#
#-----------------------------------------------------------------------

#@DUAL_DYNO_CONTROL
# Active    Threshold_value    Threshold_hysteresis    Switch_variable
#   1         100[lb_ft]       10[lb_ft]               Torque


# -----------------------------------------------------------------------
#
#      Specify the label and computation rate for the controller
#         (REQUIRED ENTRY)
#
#   @DYNO_CTRLER
#      <ctrler_name> <output_units> <interval> <open_loop_ramp_rate>
#
#      where:
#         ctrler name - The root of the variables created for the
#         controller.
#                        The labels created are:
#                        ctrler_name_CM    (Command output)
#                        ctrler_name_OL    (Open loop target)
#                        ctrler_name_PT    (Proportional term)
#                        ctrler_name_IT    (Integral term)
#                        ctrler_name_DT    (Derivative term)
#                        ctrler_name_FF    (Feed forward term)
#                        ctrler_name_FA    (Feed forward active)
#
#                        ctrler_name_FG    (Feedforward gain)
#                        ctrler_name_LB    (Lower bound)
#                        ctrler_name_UB    (Upper bound)
#
#                        ctrler_name_IL    (Integral lower bound)
#                        ctrler_name_IU    (Integral upper bound)
#                        ctrler_name_LO    (Lower output limit)
#                        ctrler_name_UO    (Upper output limit)
#
```

```
#                       ctrler_name_MD    (Mode of control - LOGICAL
#                                          VARIABLE)
#                       ctrler_name_OC    (Open/Closed STRING
#                                          VARIABLE)
#
#                    NOTE: Since 3 characters are appended to the label
#                          root, the root should have a maximum of 28
#                          characters.
#
#         command   - the units assigned to created variables
#         output      NOTE: The units of the controller are assigned
#         units             to _CM, _PT, _FT and other variables.
#
#         interval  - The calculation interval for the control loop.
#                     Valid entries are SLO, MED, FAS, WARP, USR1, and
#                     USR2.
#
#                   - Dyno and throttle controls should be executed at
#                     the same intervals
#
#         open loop - The open loop ramp rate value.  This can be a
#         ramp rate   value, CyFlex label, or "expression"
#
#  IMPORTANT NOTES: Many commands, as well as gp_test, will overwrite
#                   the ramp rate so it is likely that the value in
#                   the specification file will only be used
#                   initially.
#
#                   This keyword must appear before other DYNO
#                   keywords!!!!!
#
# ------------------------------------------------------------------

@DYNO_CTRLER
   # label                                        open-loop
   # root        output units      interval      ramp rate
   Dyno             %              FAS           5

# ------------------------------------------------------------------
#
#      Specify the output channel for the controller
#         (REQUIRED ENTRY)
#
#   @DYNO_OUTPUT_CHAN
#
#      One of 4 output types may be specified, AO, CO, DO, or RV
#
#
#         AO  <channel> <zero_value> <span_value> <filter_constant>
#            where:
```

```
#                channel        - is the analog output channel number
#                                 that will receive the Dyno_CM value.
#
#                zero_value     - the command output value associated
#                                 with 0 % of the range of the AO
#                                 device.
#
#                span_value     - the command output value associated
#                                 with 100 % of the range of the AO
#                                 device.
#
#                filter_constant- a recursive filter factor between 0
#                                 and 0.99
#
#          CO  <channel> <zero_value> <span_value> <filter_constant>
#
#             where:
#                channel        - is the counter output channel number
#                                 that will receive the Dyno_CM value.
#
#                zero_value     - the command output value associated
#                                 with 0 % of the range of the CO
#                                 device.
#
#                span_value     - the command output value associated
#                                 with 100 % of the range of the CO
#                                 device.
#
#                filter_constant- a recursive filter factor between 0
#                                 and 0.99
#
#          RV  <target_label>  <bias>  <gain>   <filter>
#
#             where:
#                target_label   - is the real variable where the
#                                 Dyno_CM value will be placed
#
#                bias           - an offset applied to the value before
#                                 units conversion
#
#                gain           - a multiplier applied to the value
#                                 before units conversion
#
#                filter         - a recursive filter factor between 0
#                                 and 0.99
#
#           DO  <DO PWM label>  <base_period> [enable_label]
#
#              where:
#
```

```
#                DO_PWM_label - is the label of the DO bit that will
#                               provide the PWM output. This label
#                               must already exist and be contained in
#                               the do_specs file.
#
#                base_period  - A label whose value will be used as
#                               the base period of the PWM output. A
#                               numeric value may be specified. For
#                               this case, the value must also contain
#                               the time units,eg. 30[sec].
#
#                enable_label - The label of a LOGICAL_VARAIBLE that
#                               is used to disable/enable the PWM
#                               output.
#
#          LV  <LV PWM label>  <base_period> [enable_label]
#
#             where:
#
#                LV_PWM_label - is the label of the LOGICAL variable
#                               that will provide the PWM output. This
#                               label must already exist.
#
#                base_period  - A label whose value will be used as
#                               the base period of the PWM output. A
#                               numeric value may be specified. For
#                               this case, the value must also contain
#                               the time units,eg. 30[sec].
#
#                enable_label - The label of a LOGICAL_VARAIBLE that
#                               is used to disable/enable the PWM
#                               output.
#
#  NOTE ON FILTERS:
#
#     A recursive filter factor of 0 means that no filtering of the
#     output is applied.  A factor of 0.5 means that 50% of the
#     previous value will be added to 50% of the most recent value.
#     This causes the output to be less noisy and change more
#     slowly.
#
#     As the filter factor approaches 1.0 the percentage of the most
#     recent value approaches 0% and the responsiveness of the
#     controller becomes very slow.  A value of 1.0 should never be
#     used.
#
# ---------------------------------------------------------------------

@DYNO_OUTPUT_CHAN
#    AO  <channel> <zero_value> <span_value> <filter_constant>
```

```
     AO      1         0          100             0.0

# ------------------------------------------------------------------
#
#      Specify the command output bounds for the controller
#         (OPTIONAL ENTRY)
#
#   @DYNO_OUTPUT_BOUNDS
#      <lower_bound>     <upper_bound>
#
#      where:
#         lower bound - This entry may be a value of the lower bound
#                       for the output term, a label, or an
#                       "expression". The default lower bound is 0.
#
#                       A lower bound must be provided when an upper
#                       bound is specified.
#
#         upper bound - This entry may be a value of the upper bound
#                       for the output term, a label, or an
#                       "expression". The default upper bound is 100.
#
#                       An upper bound must be provided when an lower
#                       bound is specified.
# ------------------------------------------------------------------

@DYNO_OUTPUT_BOUNDS
   #<lower_bound>     <upper_bound>
      0                100[%]

# ------------------------------------------------------------------
#
#      Specify the integral term bounds for the controller
#         (OPTIONAL ENTRY)
#
#   @DYNO_INTEGRAL_BOUND_LABELS
#      <lower_bound>     <upper_bound>
#
#      where:
#         lower integral bound - This entry may be the value of the
#                              lower bound for the integral term, a
#                              label, or an "expression" A lower bound
#                              must be provided when an upper bound
#                              is specified.
#
#         upper integral bound - This entry may be the value of the
#                              upper bound for the integral term, a
#                              label, or an "expression"
#                              An upper bound must be provided when an
#                              lower bound is specified.
```

```
#
#   NOTE: If the @DYNO_INTEGRAL_BOUND_LABELS is not entered, integral
#         bounds will default to 0 and 100.  This may not be
#         appropriate if negative commands are required.
#
#
# ---------------------------------------------------------------------

@DYNO_INTEGRAL_BOUND_LABELS
   #<lower_bound_label>                <upper_bound_label>
      dyno_int_LB                       100[%]


# ---------------------------------------------------------------------
#
#      Specify the hysteresis for the controller
#         (OPTIONAL ENTRY)
#
#   @DYNO_HYSTERSIS
#      <value>
#
#      where:
#         value - is the hysteresis value of the controlled device.
#                 If not specified a value of 0.0 will be assumed.
#
# ---------------------------------------------------------------------

@DYNO_HYSTERSIS
   #<value>
      0.5

# ---------------------------------------------------------------------
#
#      Specify the command map pathname for the controller
#         (OPTIONAL ENTRY)
#
#   @DYNO_COMMAND_MAP_FILE
#      <pathname>
#
#      where:
#         pathname - is the full path name of the file to use as a
#                    command map for the output command.  If this key
#                    word is not entered, then no command map will be
#                    applied to the output command.
#
# ---------------------------------------------------------------------

#@DYNO_COMMAND_MAP_FILE
#   <pathname>
#   /specs/throttle_map
```

```
# ------------------------------------------------------------------
#
#      Specify the error scaling variable for the controller
#         (OPTIONAL ENTRY)
#
#   @DYNO_ERROR_SCALING_LABEL
#      <scale_error_label>
#
#      where:
#         scale_error - The label whose value will be used to scale
#             label     the computed error term.  The computed error
#                       is multiplied by this value before the output
#                       term is computed.  If this keyword is not
#                       entered no scaling will be performed.  This is
#                       a convenient way to make the gains a function
#                       of another variable(s).  The units of this
#                       variable must be [none].
#
# ------------------------------------------------------------------

@DYNO_ERROR_SCALING_LABEL
   #<scale_error_label>
     gain_scale_var


# ------------------------------------------------------------------
#
#      Specify the feed forward variable for the controller
#         (OPTIONAL ENTRY)
#
#   @DYNO_FEED_FORWARD
#      <label>     <active>    <gain>
#
#      where:
#         label    - A label of an CyFlex variable is entered. Its
#                    value is multiplied by the gain.  The variable
#                    must be defined elsewhere and already exist in
#                    the system.
#
#         active   - A flag indicating if the feed forward term is
#                    initially active or inactive. Valid entries for
#                    this field are YES, Y, T, TRUE.  Any other value
#                    will be taken as NO or FALSE.  The value can be
#                    changed on the fly by setting the XXXXXX_FA
#                    variable TRUE or FALSE.
#
#         gain     - The feed forward gain that will be used when feed
#                    forward is active.  This can be a constant,
#                    label, or expression.
```

```
#
#             NOTE: If this keyword is not entered, then no feed
#                   forward term will be computed.
#
# ------------------------------------------------------------------

@DYNO_FEED_FORWARD
   # <label>             <active>    <gain>
      dyno_ff             NO          dyno_ff_gain

# ------------------------------------------------------------------
#
#      Specify the local command label for the controller
#         (OPTIONAL ENTRY)
#
#   @DYNO_LOCAL_COMMAND_LABEL
#      <local_label>
#
#      where:
#         local_label - is the name of the CyFlex REAL variable that
#                       contains the local command output when the
#                       control loop is not under computer control. If
#                       this keyword is not entered then no local
#                       command will be applied.
#
# ------------------------------------------------------------------

#@DYNO_LOCAL_COMMAND_LABEL
#   <local_label>
#   dyno_local_setting


# ------------------------------------------------------------------
#
#      Specify the remote sense LOGICAL VARIABLE for the controller
#         (OPTIONAL ENTRY)
#
#   @DYNO_REMOTE_SENSE_LABEL
#      <remote_label>
#
#
#
#      where:
#         remote_label - is the label of the CyFlex LOGICAL_VARIABLE
#                        that will be used to determine if remote
#                       (computer) control is to be used or local
#                        control. If this keyword is not entered, then
#                        only remote (computer) control will be used.
#
# ------------------------------------------------------------------
```

```
#@DYNO_REMOTE_SENSE_LABEL
#   <remote_label>
#   dyno_local_remote


# ------------------------------------------------------------------
#
#     Specify the initial PID gains for the controller.  These values
#     will be reflected in the variables <ctrler_name_PG, _IG, and
#     _DG> and may be changed by the user at any time after initial
#     configuration.
#
#     An option (+s) exists with the dy_gains and th_gains command to
#     modify this file by storing the gains that are presently in use.
#     Enter
#     <use dy_gains> for more information.
#
#         (REQUIRED ENTRY)
#
#   @DYNO_XXXX_GAINS
#      <proportional>    <integral>     <derivative>
#
#      where:
#         proportional - The proportional gain value
#
#         integral     - The integral gain value
#
#         derivative   - The derivative gain value
#
# ------------------------------------------------------------------

@DYNO_SPEED_GAINS
   # proportional   integral   derivative
    -0.600000     -0.300000     0.000000

@DYNO_DYNO_TORQUE_GAINS
   # proportional   integral   derivative
       1.0          0.11        0.011

@DYNO_NET_TORQUE_GAINS
   # proportional   integral   derivative
      1.20          0.12        0.012

@DYNO_OTHER_GAINS
   # proportional   integral   derivative
      1.30          0.13         0.013

# ------------------------------------------------------------------
#
```

```
#      Specify some attributes of the created controller variables.
#          (OPTIONAL ENTRIES)
#
#   @DYNO_LOOP_VRBL_OPTS_CM
#      <display_precision>    <history_active>    <history_tolerance>
#
#      where:
#         display   - The number of decimal places to be displayed by
#         precision   the display task when the variable
#                     is displayed. Default is 1
#
#         history   - A flag indicating if the variable should be
#         active      included in the history log. Valid entries for
#                     this field are Y, YES, T or TRUE. All other
#                     entries are set to FALSE.
#
#         history   - The amount the variable must change for it to be
#         tolerance   written to the history log. Default is 5.0.
#                     A value of 0 will NOT be accepted.
#
#      NOTE:  There is a similar specification for each of the created
#             variables.  The only thing that is different is the
#             suffix of the keyword. The additional keywords for
#             created variable options are:
#
#   @DYNO_LOOP_VRBL_OPTS_PT
#   @DYNO_LOOP_VRBL_OPTS_IT
#   @DYNO_LOOP_VRBL_OPTS_DT
#   @DYNO_LOOP_VRBL_OPTS_FF
#   @DYNO_LOOP_VRBL_OPTS_OL
#
# ---------------------------------------------------------------------

@DYNO_LOOP_VRBL_OPTS_CM
   #<display_precision>     <history_active>     <history_tolerance>
            2                    YES                      1
#@DYNO_LOOP_VRBL_OPTS_PT
#   #<display_precision>     <history_active>     <history_tolerance>
#            3                    N                        1
#@DYNO_LOOP_VRBL_OPTS_IT
#   #<display_precision>     <history_active>     <history_tolerance>
#            3                    N                        1
#@DYNO_LOOP_VRBL_OPTS_DT
#   #<display_precision>     <history_active>     <history_tolerance>
#            3                    N                        1
#@DYNO_LOOP_VRBL_OPTS_FF
#   #<display_precision>     <history_active>     <history_tolerance>
#            3                    N                        1
#@DYNO_LOOP_VRBL_OPTS_OL
#   #<display_precision>     <history_active>     <history_tolerance>
```

```
#            3                    N                       1
#
#

# ------------------------------------------------------------------
#
#  The above keywords and explanations apply to the THROTTLE and DYNO2
#  controllers.
#
# -------------------------------------------------------------------
#
#  NOTE: This keyword must appear before other THROTTLE keywords!!!!!
#

@THROTTLE_CTRLER
   # label                                        open-loop
   # root        output units      interval      ramp rate
   Throttle          %              FAS            5


@THROTTLE_OUTPUT_CHAN
#    AO  <channel> <zero_value> <span_value> <filter_constant>
     AO      2         0          100             0.0


@THROTTLE_OUTPUT_BOUNDS
   #<lower_bound>     <upper_bound>
       0               100


@THROTTLE_INTEGRAL_BOUND_LABELS
   #<lower_bound_label>                <upper_bound_label>
      throt_int_LB                       100


@THROTTLE_HYSTERSIS
   #<value>
      0

@THROTTLE_ERROR_SCALING_LABEL
   #<scale_error_label>
      gain_scale_var


@THROTTLE_FEED_FORWARD
   # <label>             <active>    <gain>
      throttle_ff          YES         throt_ff_gain


@THROTTLE_SPEED_GAINS
```

```
   # proportional   integral   derivative
      0.02          0.02       0.00


@THROTTLE_GROSS_TORQUE_GAINS
   # proportional   integral   derivative
      0.02          0.02       0.00


@THROTTLE_NET_TORQUE_GAINS
   # proportional   integral   derivative
    0.060000     0.200000     0.000000


@THROTTLE_OTHER_GAINS
   # proportional   integral   derivative
     0.3            0.23       0.003


# ------------------------------------------------------------------
#
#  The above explanations apply to the second dyno controller as well
#
#  Use these keywords ONLY if the dual dyno option is used!
#
# ------------------------------------------------------------------
#
#  NOTE: This keyword must appear before other DYNO2 keywords!!!!!
#

@DYNO2_CTRLER
   # label                                        open-loop
   # root        output units      interval      ramp rate
   Dyno2            %              FAS            5


@DYNO2_OUTPUT_CHAN
#    AO  <channel> <zero_value> <span_value> <filter_constant>
     AO      3         0          100             0.0


@DYNO2_OUTPUT_BOUNDS
   #<lower_bound>     <upper_bound>
       0               100


@DYNO2_INTEGRAL_BOUND_LABELS
   #<lower_bound_label>                 <upper_bound_label>
      -50                                100
```

```
@DYNO2_HYSTERSIS
   #<value>
      0

#@DYNO2_ERROR_SCALING_LABEL
#   #<scale_error_label>
#      gain_scale_var


#@DYNO2_FEED_FORWARD
#   # <label>             <active>    <gain>
#      dyno2_ff           YES         dyno2_ff_gain


@DYNO2_SPEED_GAINS
   # proportional   integral   derivative
    -0.600000     -0.300000     0.000000


@DYNO2_DYNO_TORQUE_GAINS
   # proportional   integral   derivative
       1.0          0.11        0.011


@DYNO2_NET_TORQUE_GAINS
   # proportional   integral   derivative
      1.20          0.12        0.012


@DYNO2_OTHER_GAINS
   # proportional   integral   derivative
      1.30          0.13         0.013

$END
```

Appendix B. Example Command Map

```
######################## Command Map ################################

# Z Variable Definition

RPM

# Number of z_values

2

# Number of commands

9

#  Z Values

   9.000000E02   1.800000E03

#   Normal Cmds         Delinearized Cmds

   0.000000E00   1.000000E-02  1.000000E-02  1.000000E-02
   1.226994E00   1.200000E01   8.895646E-01  6.102686E00
   9.221557E00   1.764406E01   6.620429E00   4.580000E01
   6.131737E01   5.442304E01   4.396506E01   6.560000E01
   7.433962E01   6.361658E01   5.330000E01   7.148061E01
   9.075472E01   7.520543E01   5.730000E01   7.889337E01
   9.652695E01   7.928055E01   8.395945E01   8.150000E01
   9.754601E01   8.000000E01   8.866608E01   8.692828E01
   1.000000E02   1.000000E02   1.000000E02   1.000000E02

######################## End of Command Map #########################


######################## Gain Scale Table ############################

# Number of coordinates

3

#         Z Value         Scaling Factor

          7.000000E02     4.100629E-01
          1.300000E03     1.000000E00
          2.100000E03     6.301887E-01

######################## End of Gain Scale Table ####################
```